ZETA 350 ZETA 400

Max.: 345 l/min - 92 GPM · 20 bar - 290 PSI · 550 RPM

Max.: 400 l/min - 106 GPM · 20 bar - 290 PSI · 550 RPM

TS 2C ZETA 350 cod. 819900
ZETA 400 cod. 820000

Disponibile con tubi in Alluminio (Max. 25 Bar)
Available with Aluminium manifolds (Max. 25 Bar)

Membrane **GREENTECH** di serie
GREENTECH *diaphragm as standard*
cod. 090362

MOD.	RPM	0 bar / 0 PSI				5 bar / 72 PSI				10 bar / 145 PSI				15 bar / 217 PSI				20 bar / 290 PSI					
		Portata *Flow rate*		Potenza *Power*		Portata *Flow rate*		Potenza *Power*		Portata *Flow rate*		Potenza *Power*		Portata *Flow rate*		Potenza *Power*		Portata *Flow rate*		Potenza *Power*		Peso *Weight*	
		l/min	GPM	HP	kW	l/min	GPM	HP	kW	l/min	GPM	HP	kW	l/min	GPM	HP	kW	l/min	GPM	HP	kW	Kg	lb
ZETA 350	**400**	251.0	66.3	2.5	1.8	247.0	65.3	4.9	3.6	244.0	64.5	7.0	5.1	242.0	63.9	9.7	7.1	240.0	63.4	12.6	9.3	70.0	154.3
	450	282.0	74.5	2.8	2.1	278.0	73.4	5.6	4.1	275.0	72.7	7.9	5.8	272.0	71.9	10.9	8.0	270.0	71.3	14.2	10.4		
	500	314.0	83.0	3.1	2.3	310.0	81.9	6.2	4.6	306.0	80.8	8.7	6.4	303.0	80.1	12.1	8.9	301.0	79.5	15.8	11.6		
	550	345.0	92.0	3.5	2.5	340.0	89.8	6.8	5.0	336.0	88.8	9.6	7.1	333.0	88.0	13.3	9.8	331.0	87.5	17.4	12.8		
ZETA 400	**400**	292.0	77.1	2.9	2.1	289.0	76.4	5.8	4.2	286.0	75.6	8.2	6.0	284.0	75.0	11.4	8.3	283.0	74.8	14.9	10.9	70.0	154.3
	450	328.0	86.7	3.3	2.4	324.0	85.6	6.5	4.8	321.0	84.8	9.2	6.7	319.0	84.3	12.8	9.4	318.0	84.0	16.7	12.3		
	500	364.0	96.2	3.6	2.7	360.0	95.1	7.2	5.3	357.0	94.3	10.2	7.5	355.0	93.8	14.2	10.4	354.0	93.5	18.6	13.7		
	550	400.0	106.0	4.0	2.9	396.0	104.6	7.9	5.8	393.0	103.8	11.2	8.3	391.0	103.3	15.6	11.5	390.0	103.0	20.5	15.1		

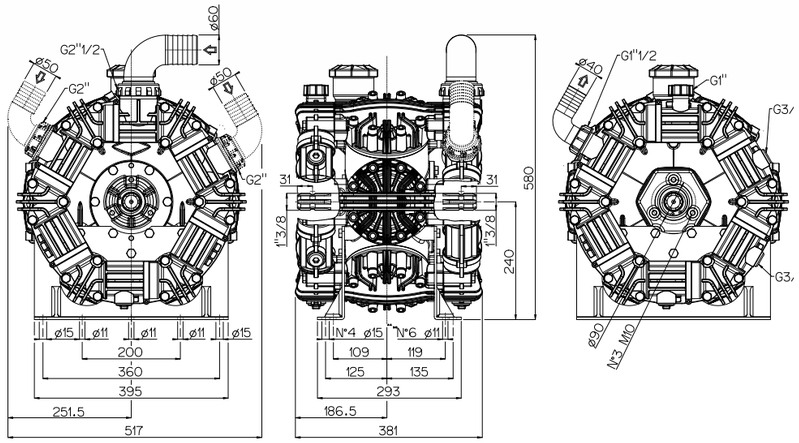

Versioni *Versions*

TS 2C ZETA 350 cod. 819900 - ZETA 400 cod. 820000

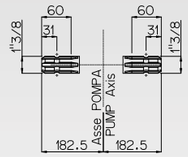

MI-25 ZETA 350 cod. 819800

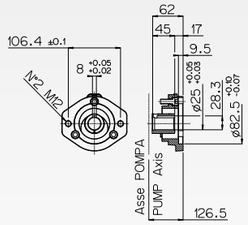

Applicazioni *Shaft adaptors*

Applicazioni motori idraulici
Shaft adaptors for hydraylic motor

MI △
vedi pag 92 *see page 92*

Moltiplicatore
Multiplier

MTP 381 △
vedi pag 90 *see page 90*

Gruppi regolazione pressione *Pressure control units*

vedi pag. 82 *see page 82*

VRG 400