UDOR WATER POWER

Serie / *Series*

CK

292400

PUMP CKC 30/30 S

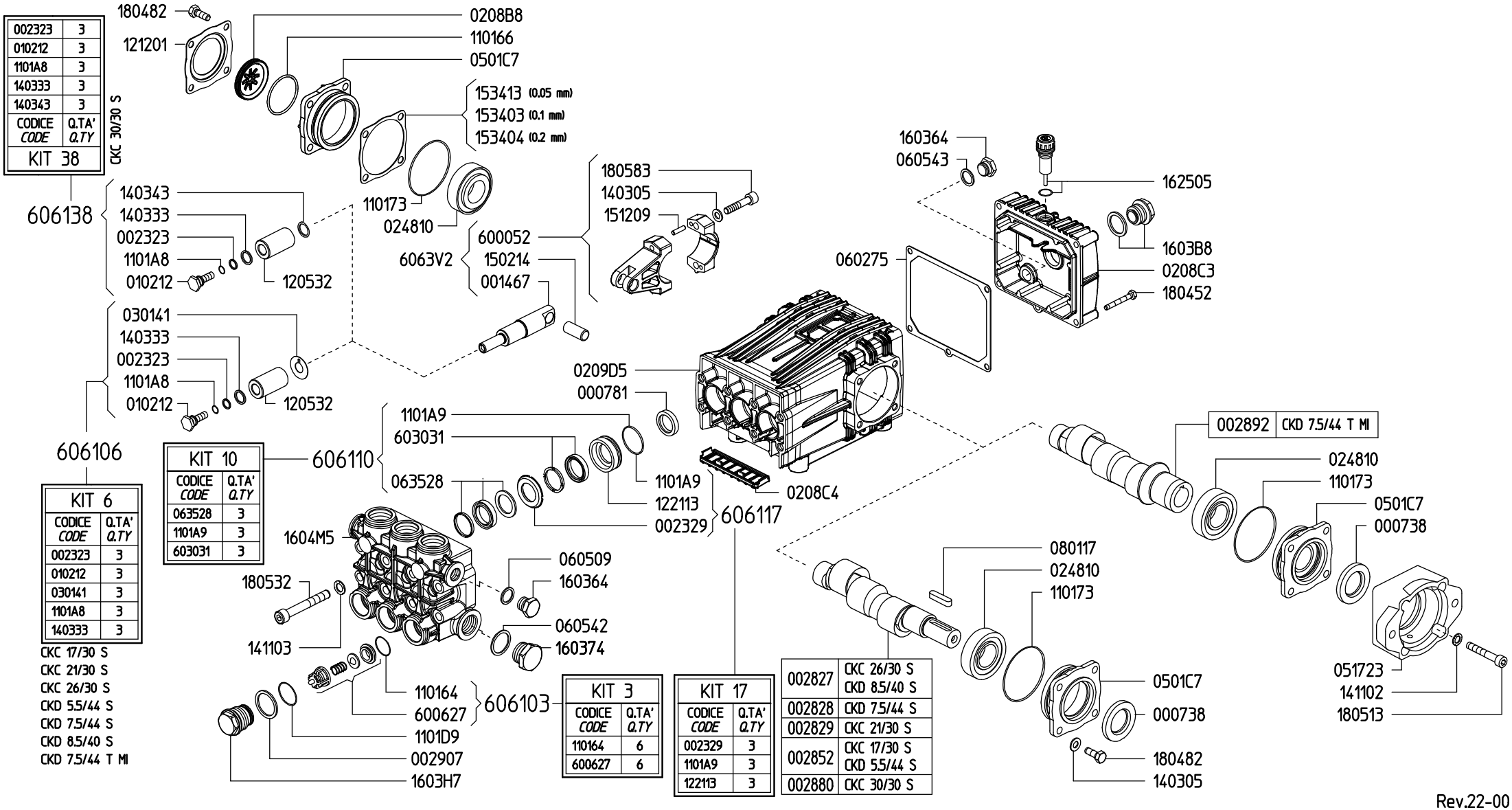

CODICE CODE	Q.TA' Q.TY
002323	3
010212	3
1101A8	3
140333	3
140343	3
KIT 38	

CKC 30/30 S

KIT 10	
CODICE CODE	Q.TA' Q.TY
063528	3
1101A9	3
603031	3

KIT 6	
CODICE CODE	Q.TA' Q.TY
002323	3
010212	3
030141	3
1101A8	3
140333	3

CKC 17/30 S
CKC 21/30 S
CKC 26/30 S
CKD 5.5/44 S
CKD 7.5/44 S
CKD 8.5/40 S
CKD 7.5/44 T MI

KIT 3	
CODICE CODE	Q.TA' Q.TY
110164	6
600627	6

KIT 17	
CODICE CODE	Q.TA' Q.TY
002329	3
1101A9	3
122113	3

002827	CKC 26/30 S CKD 8.5/40 S
002828	CKD 7.5/44 S
002829	CKC 21/30 S
002852	CKC 17/30 S CKD 5.5/44 S
002880	CKC 30/30 S