UDOR WATER POWER

Serie / *Series*

CK

295700

PUMP CKD 11.0/32 S

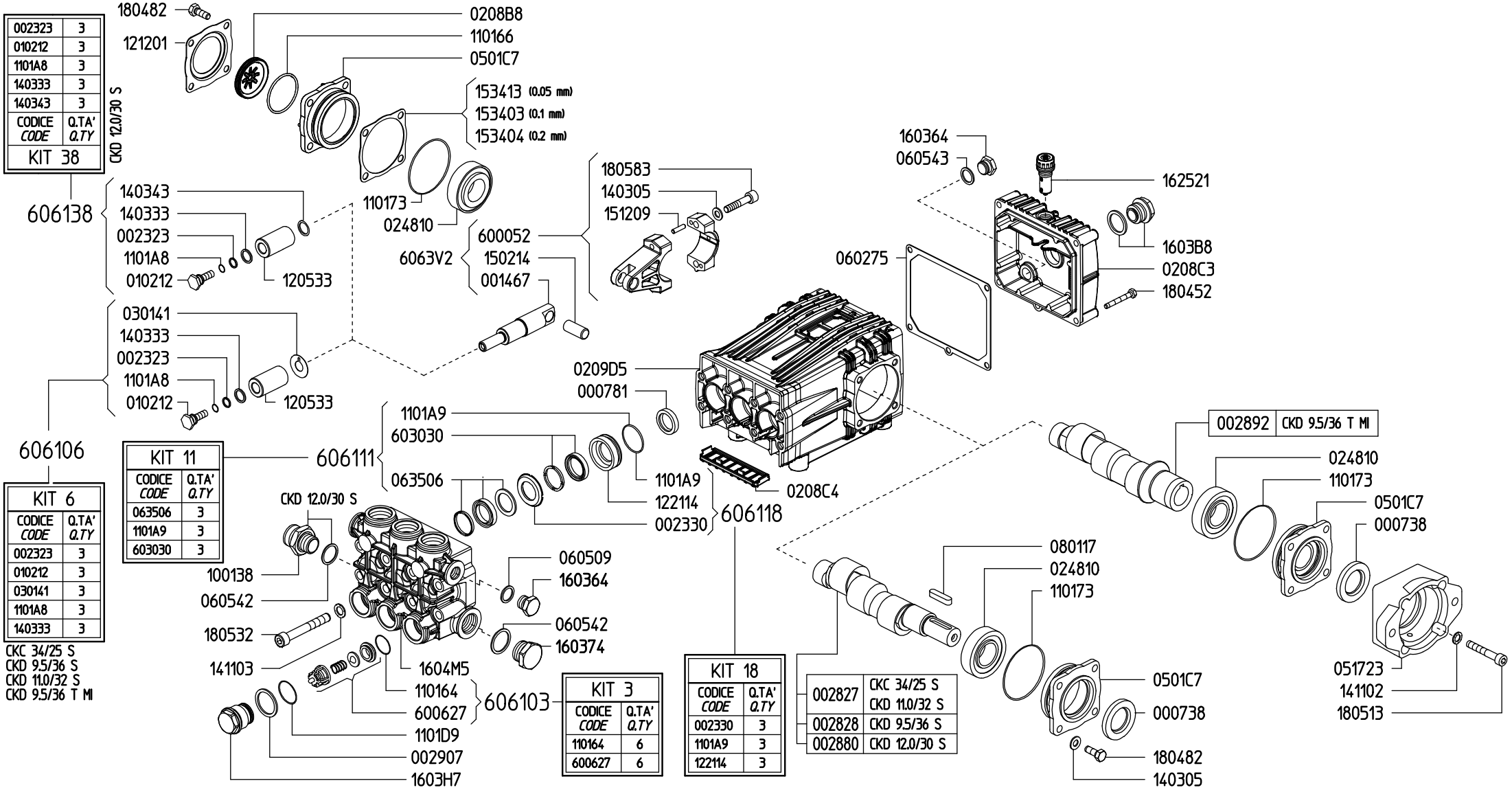

002323	3
010212	3
1101A8	3
140333	3
140343	3
CODICE *CODE*	Q.TA' *Q.TY*
KIT 38	

CKD 12.0/30 S

KIT 11	
CODICE *CODE*	Q.TA' *Q.TY*
063506	3
1101A9	3
603030	3

KIT 6	
CODICE *CODE*	Q.TA' *Q.TY*
002323	3
010212	3
030141	3
1101A8	3
140333	3

CKC 34/25 S
CKD 9.5/36 S
CKD 11.0/32 S
CKD 9.5/36 T MI

KIT 3	
CODICE *CODE*	Q.TA' *Q.TY*
110164	6
600627	6

KIT 18	
CODICE *CODE*	Q.TA' *Q.TY*
002330	3
1101A9	3
122114	3

002827	CKC 34/25 S CKD 11.0/32 S
002828	CKD 9.5/36 S
002880	CKD 12.0/30 S

Rev.24-01