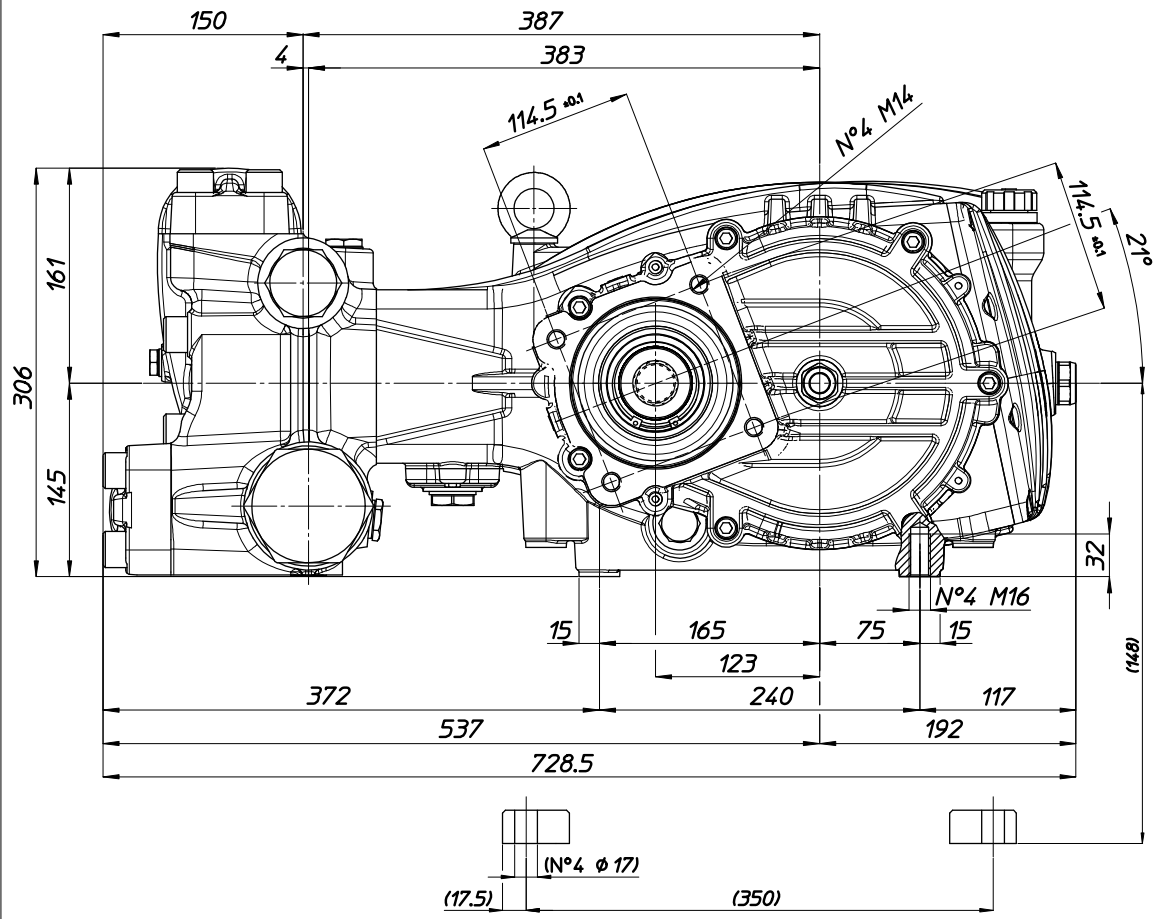

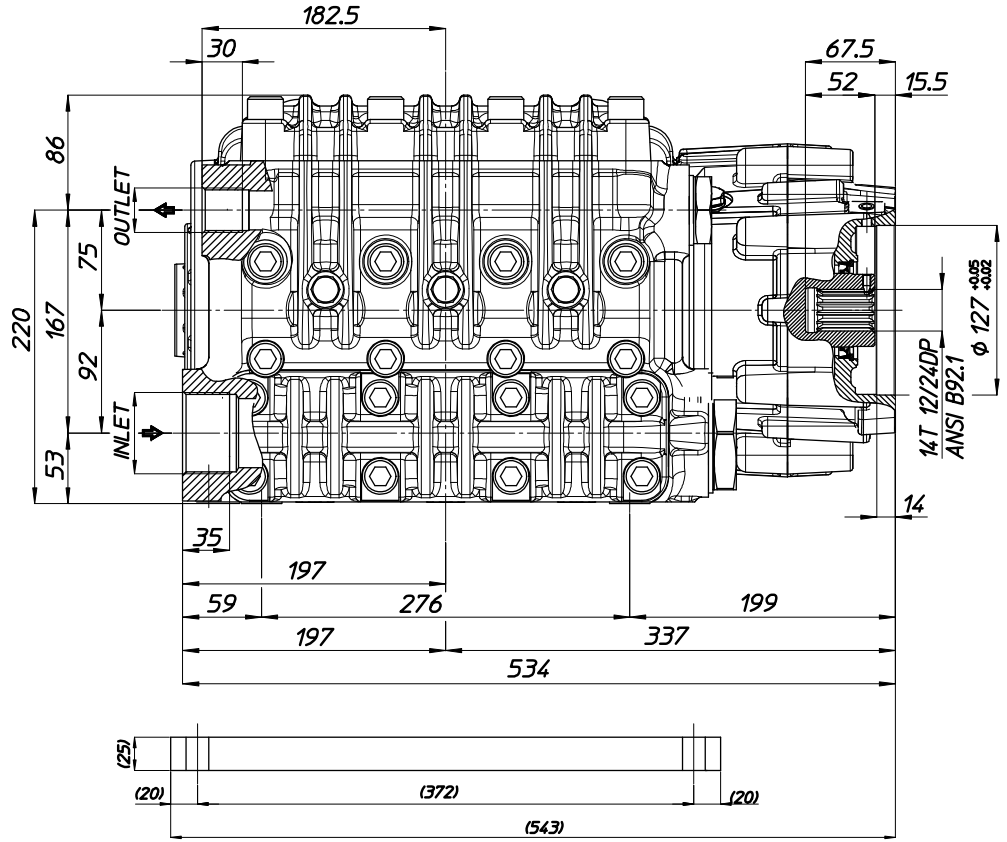

	INLET	OUTLET
135/300 R MI	G 2"	G 1"
160/240 R MI	G 2"	G 1"

	INLET	OUTLET
210/200 R MI	G 2" 1/2	G 1" 1/4
270/160 R MI	G 2" 1/2	G 1" 1/4
330/130 R MI	G 2" 1/2	G 1" 1/4
400/100 R MI	G 2" 1/2	G 1" 1/4