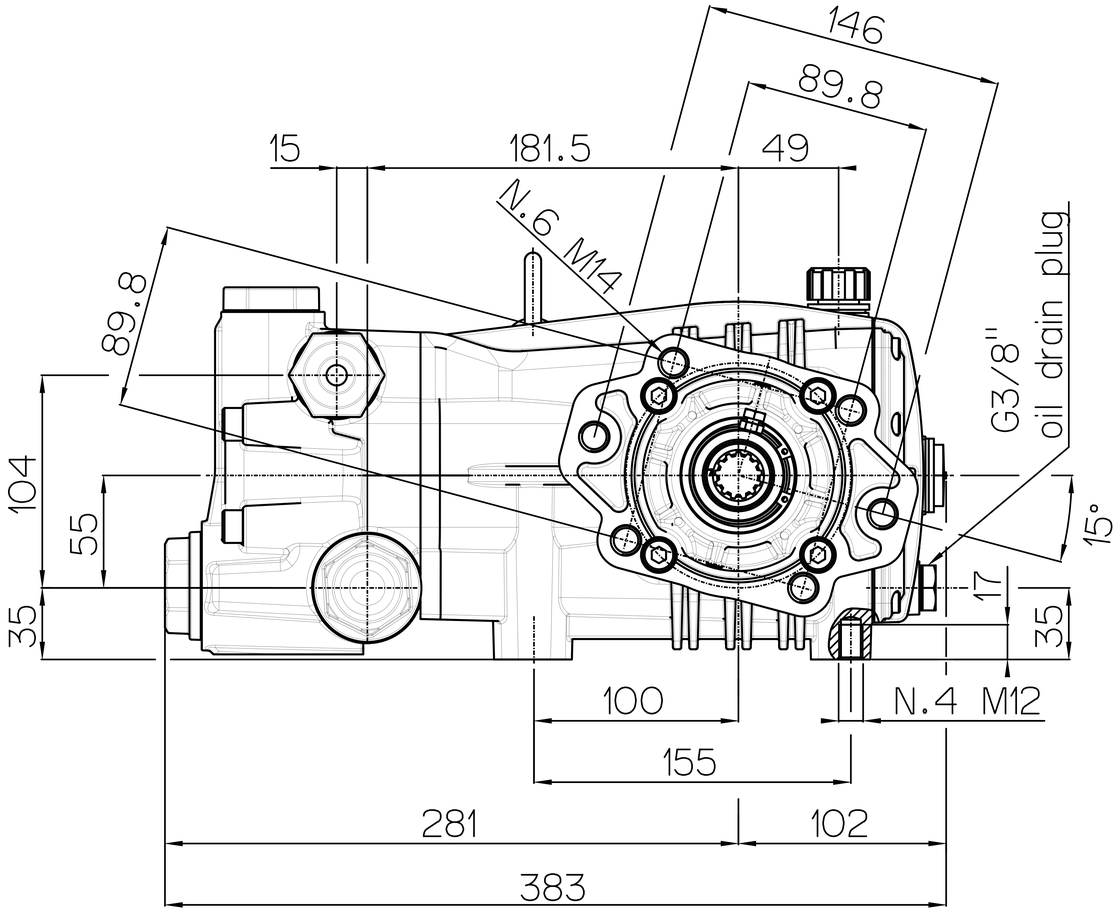
146
89.8
15
181.5
49
N.6 M14
89.8
104
55
35
G3/8"
oil drain plug
15°
17
35
100
N.4 M12
155
281
102
383

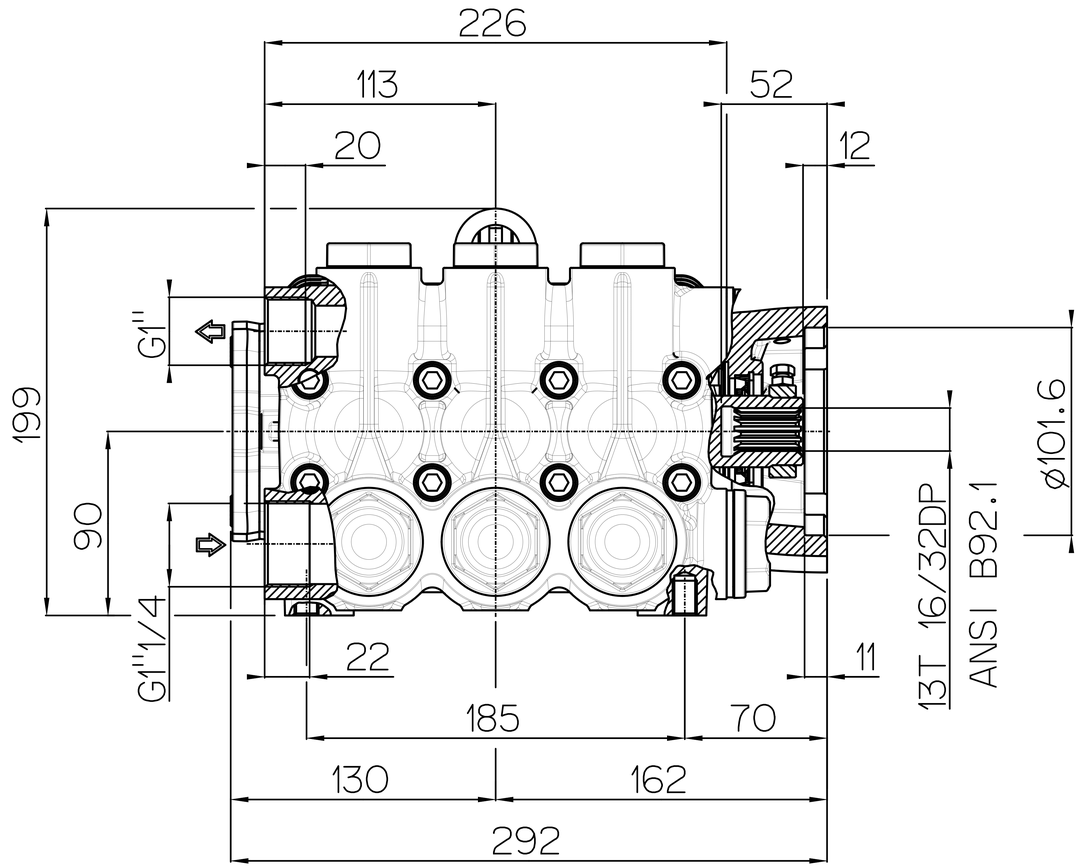
226
113
52
20
12
G1"
199
90
G1"1/4
22
11
185
70
130
162
292
13T 16/32DP
ANSI B92.1
ø101.6