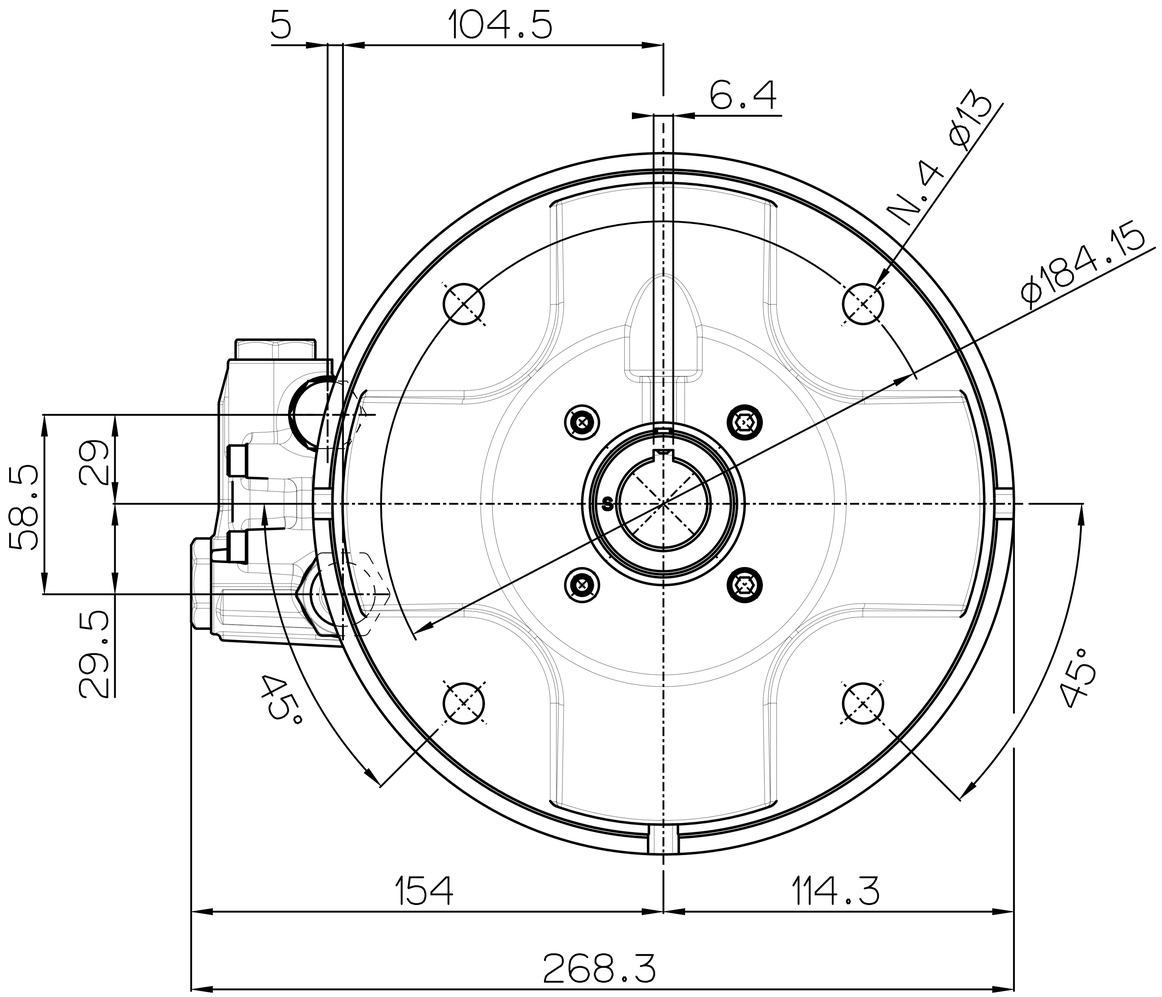
5
104.5
6.4
N.4 ø13
ø184.15
58.5
29
29.5
45°
45°
154
114.3
268.3

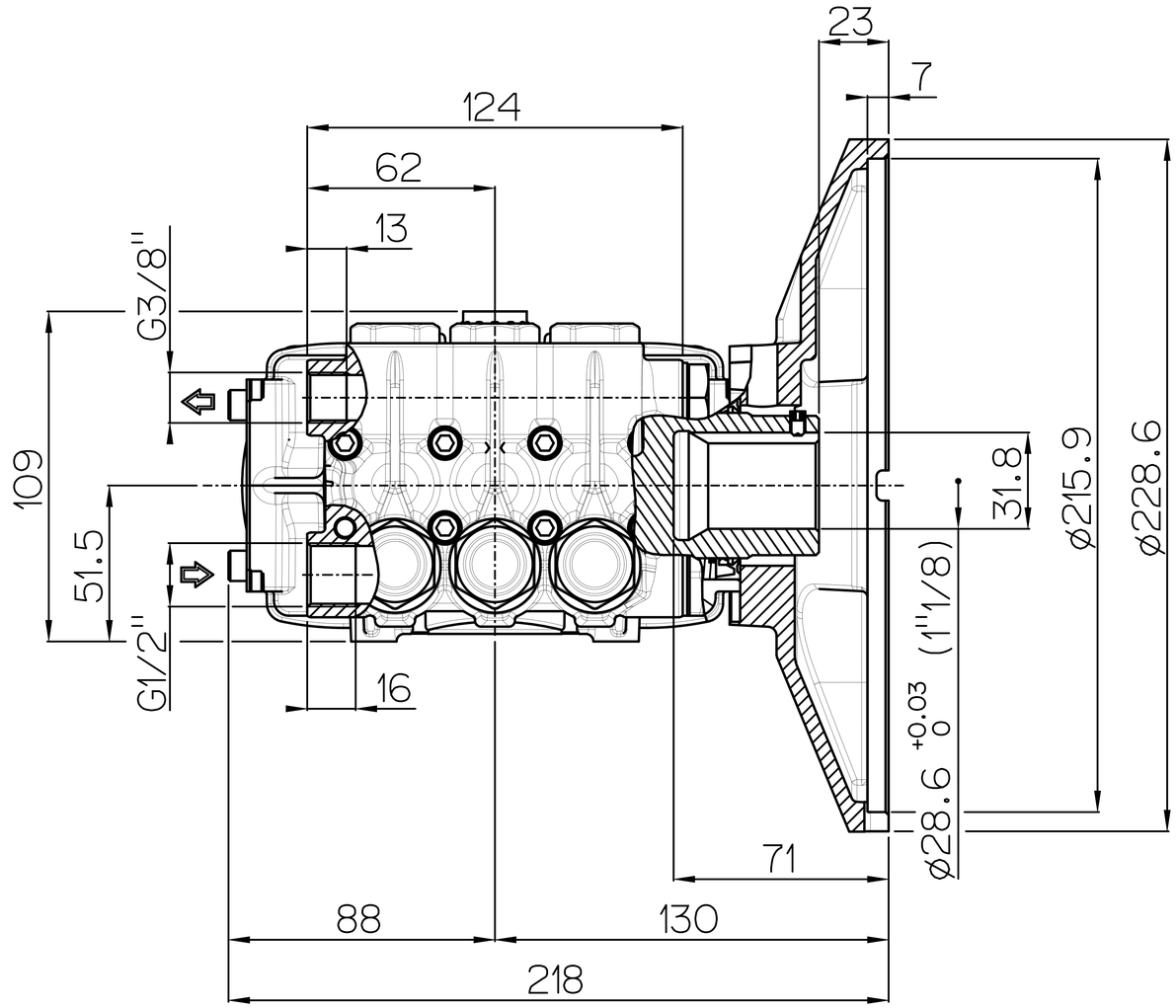
23
7
124
62
13
G3/8"
109
51.5
G1/2"
16
31.8
ø215.9
ø228.6
(1"1/8)
ø28.6 +0.03 0
71
88
130
218