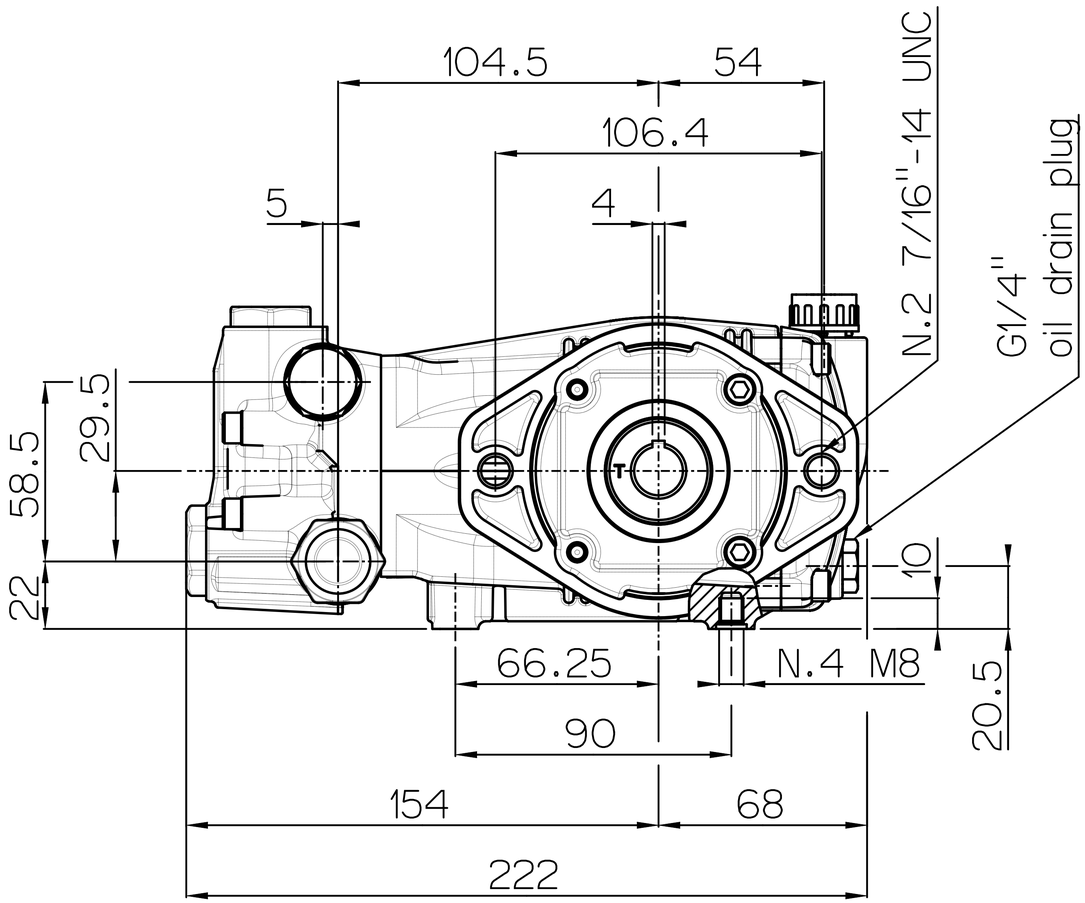
104.5
54
106.4
5
4
N.2 7/16"-14 UNC
G1/4"
oil drain plug
58.5
29.5
22
10
66.25
N.4 M8
20.5
90
154
68
222

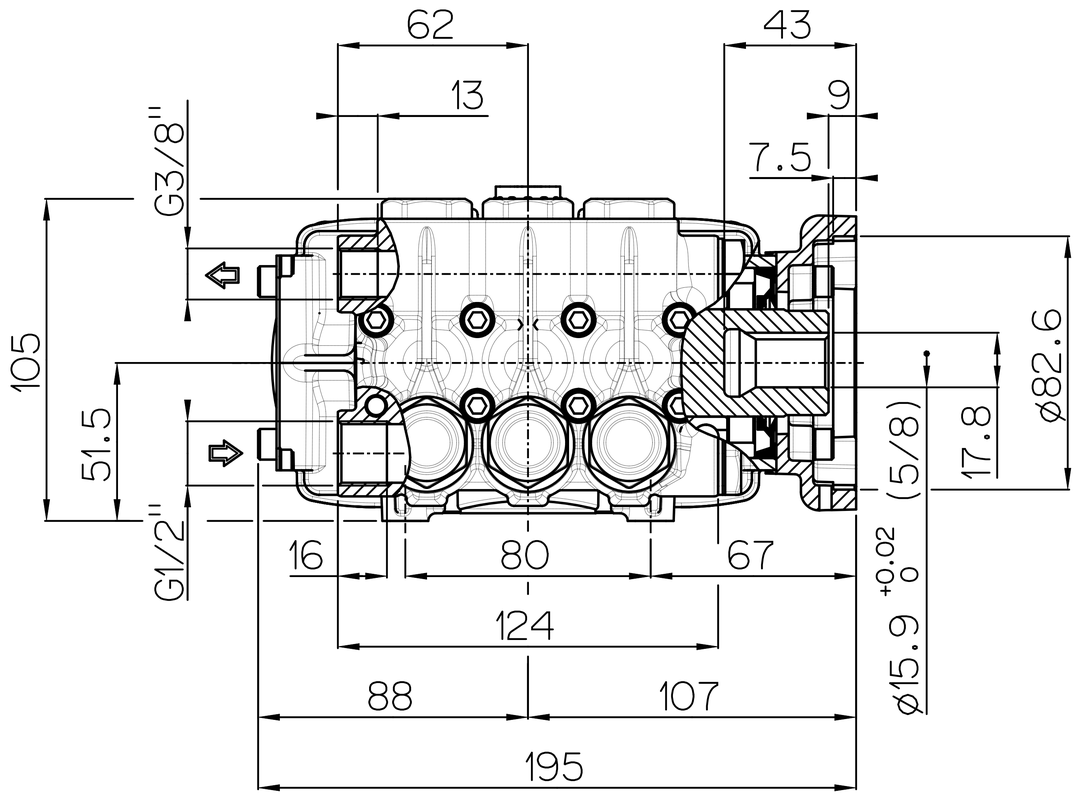
62
43
13
9
7.5
G3/8"
105
51.5
G1/2"
16
80
67
124
88
107
195
(5/8)
17.8
ø82.6
ø15.9 +0.02 0