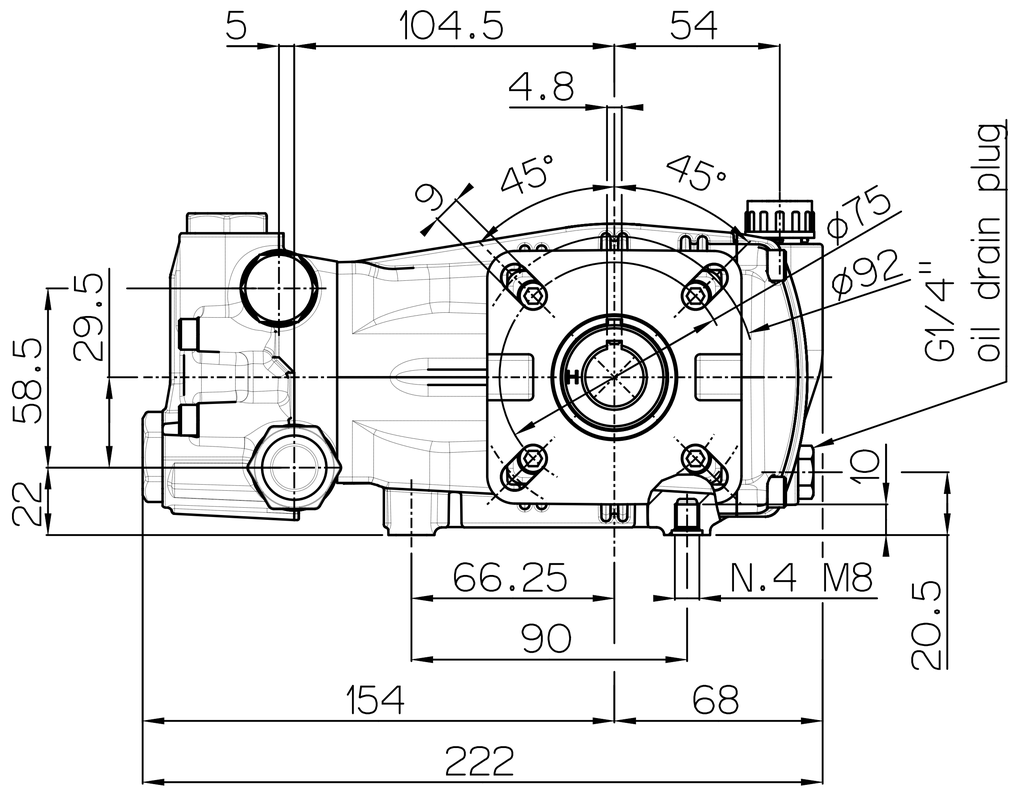
5
104.5
54
4.8
9
45°
45°
ϕ75
ϕ92
G1/4"
oil drain plug
58.5
29.5
22
10
66.25
N.4 M8
90
20.5
154
68
222

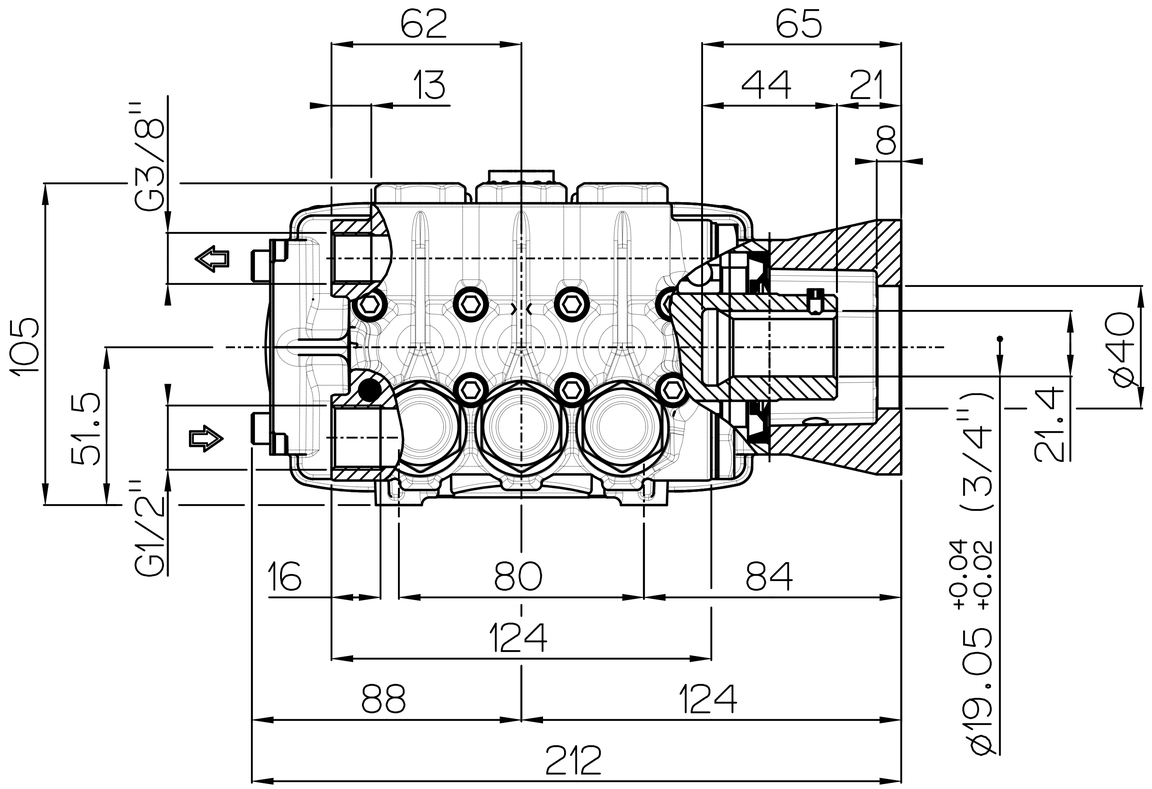
62
65
13
44
21
8
G3/8"
105
51.5
G1/2"
ϕ40
21.4
ϕ19.05 +0.04 +0.02 (3/4")
16
80
84
124
88
124
212