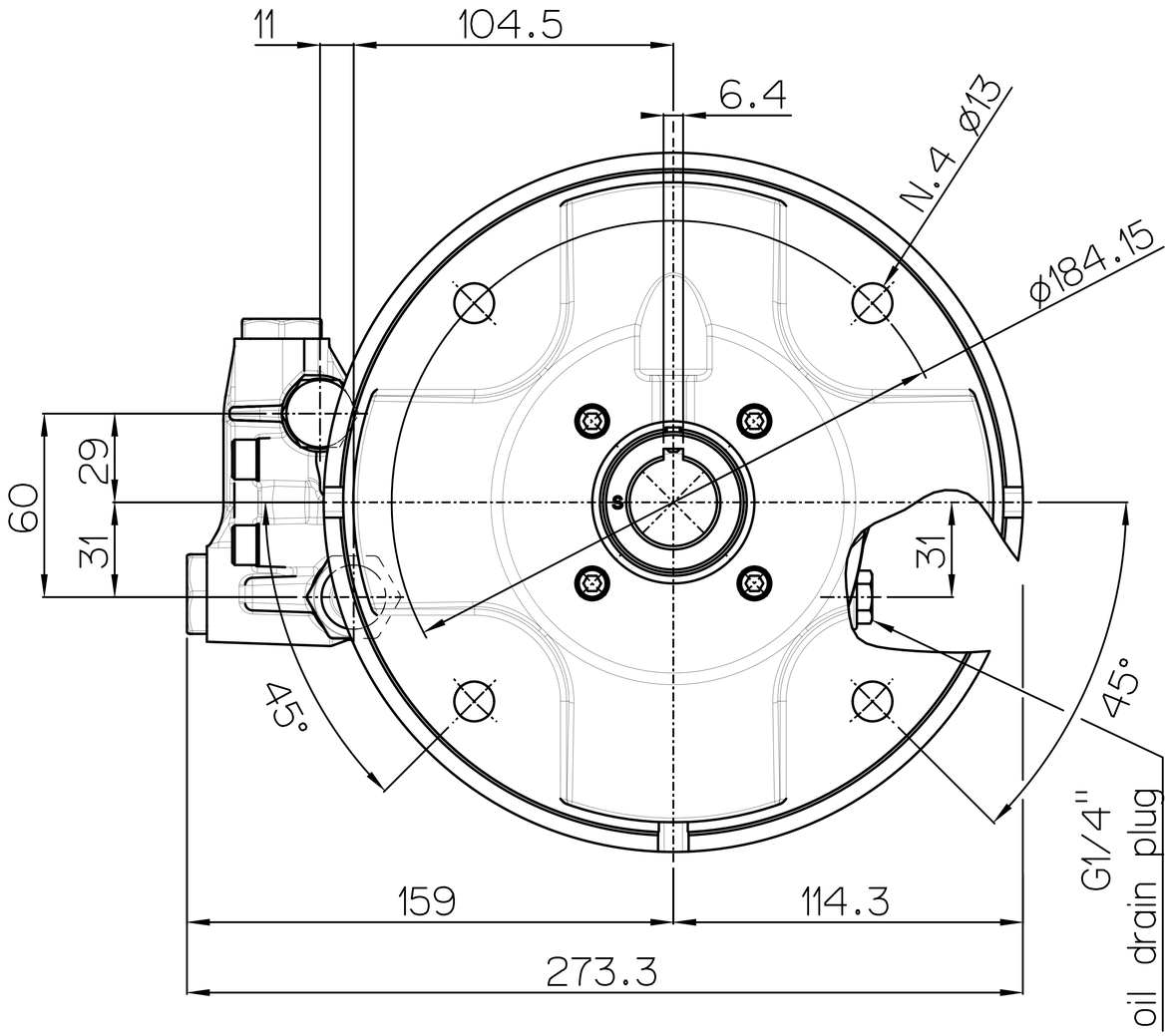
11
104.5
6.4
N.4 ø13
ø184.15
60
29
31
31
45°
45°
G1/4"
oil drain plug
159
114.3
273.3

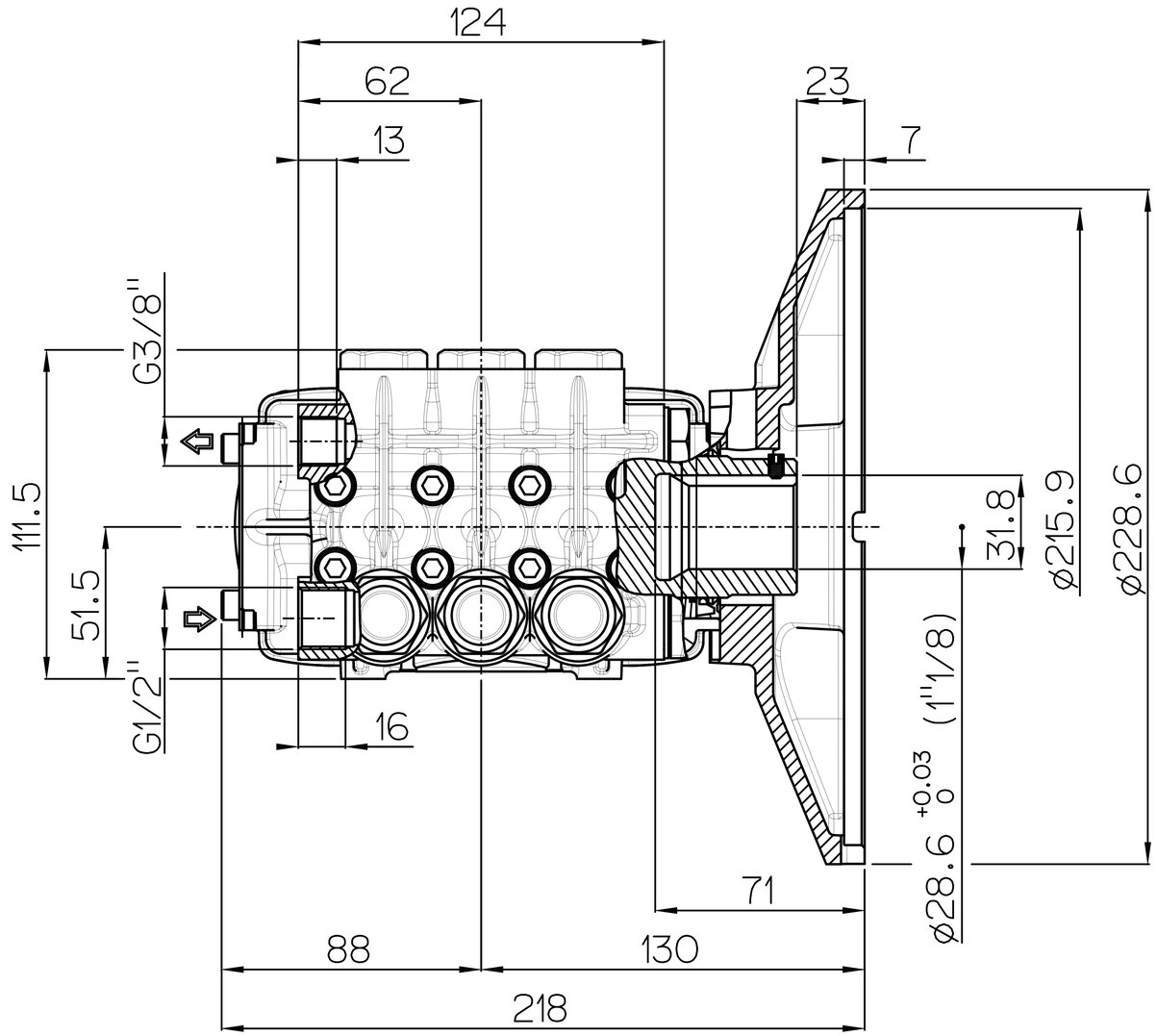
124
62
13
23
7
G3/8"
111.5
51.5
G1/2"
16
31.8
ø215.9
ø228.6
(1"1/8)
ø28.6 +0.03 0
71
88
130
218