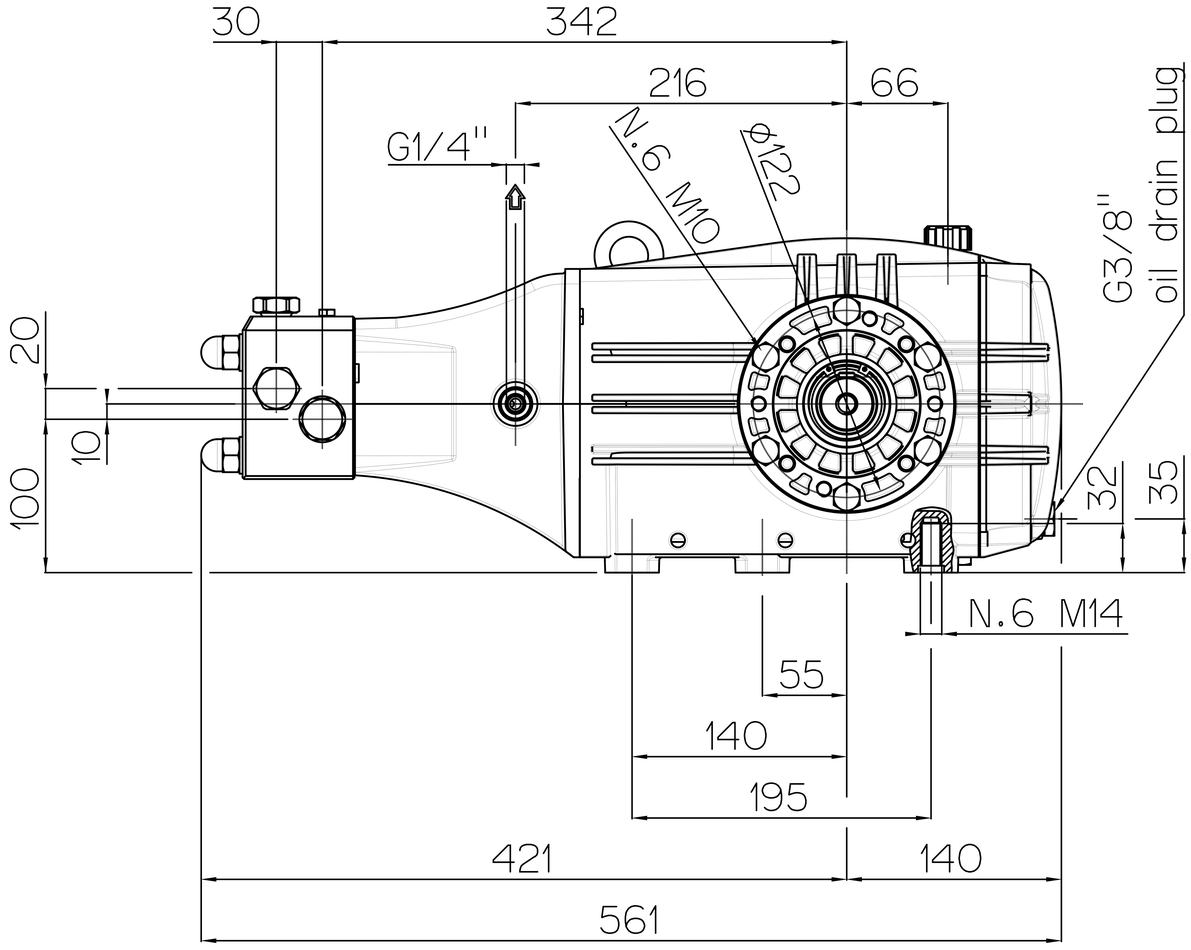
30
342
216
66
G1/4''
N.6 M10
ϕ122
G3/8''
oil drain plug
20
10
100
32
35
N.6 M14
55
140
195
421
140
561

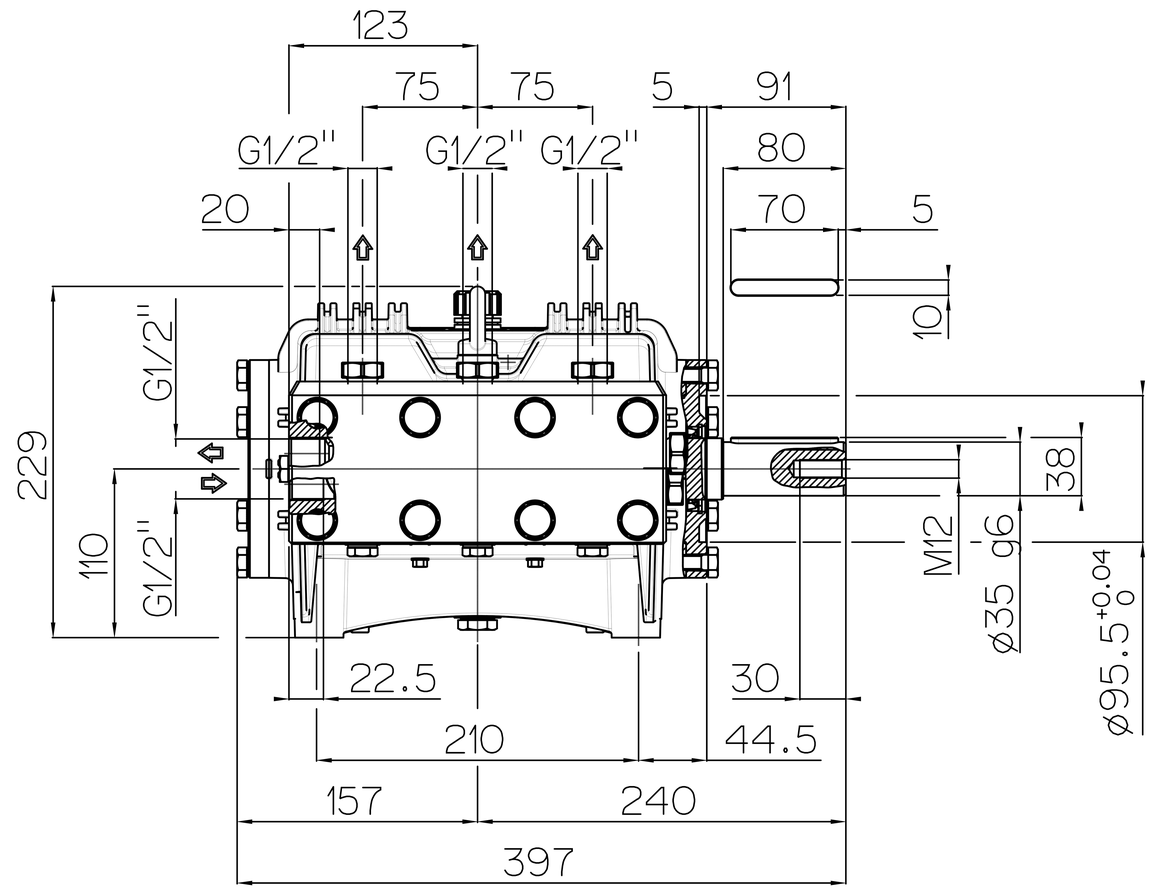
123
75
75
5
91
G1/2''
G1/2''
G1/2''
80
20
70
5
10
G1/2''
229
110
G1/2''
38
M12
ϕ35 g6
ϕ95.5 +0.04 0
22.5
30
210
44.5
157
240
397