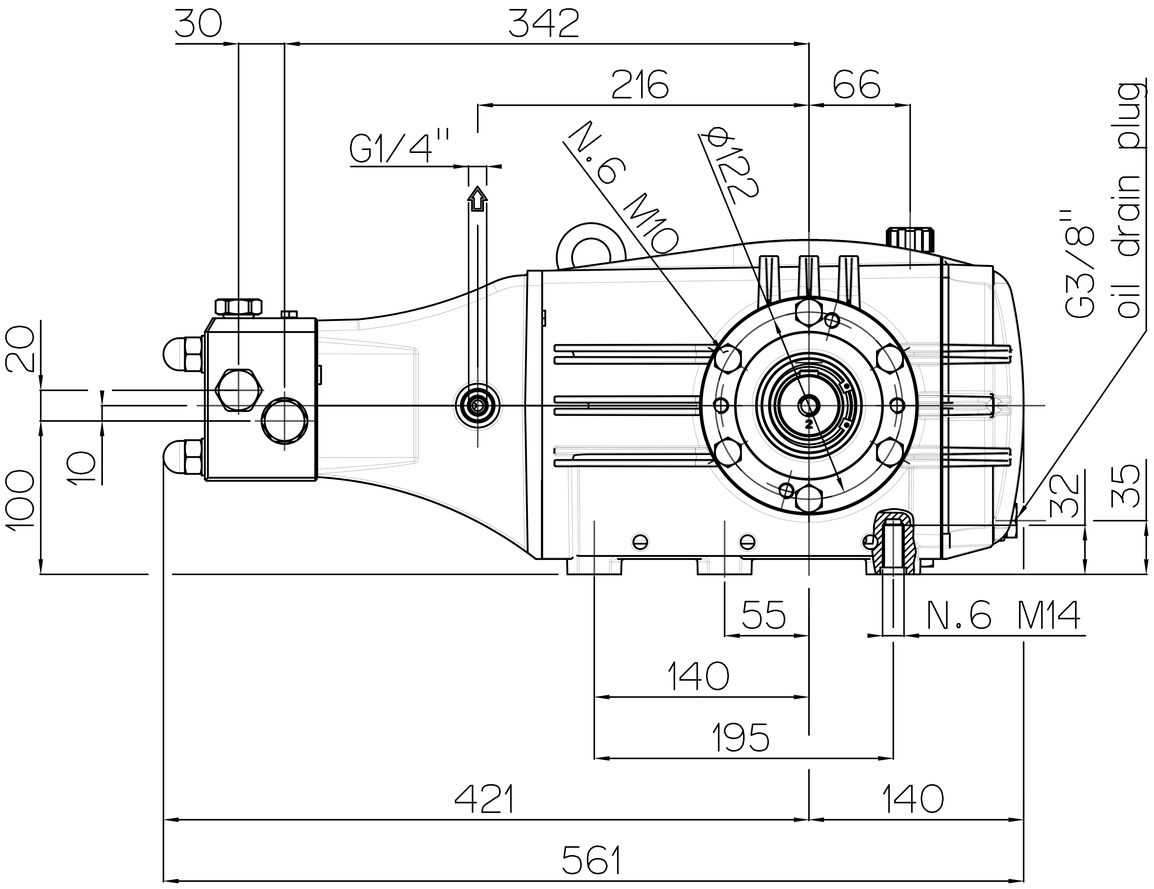
30
342
216
66
G1/4"
N.6 M10
ϕ122
G3/8"
oil drain plug
20
10
100
32
35
55
N.6 M14
140
195
421
140
561

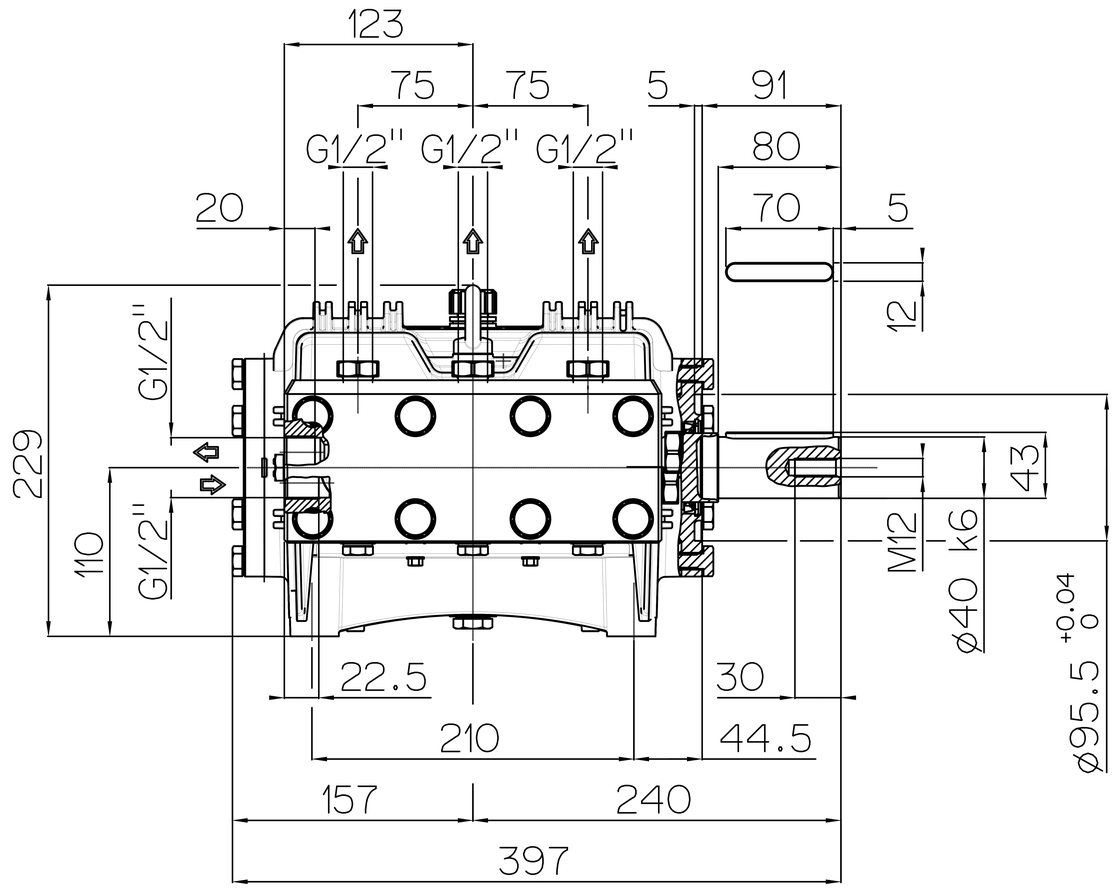
123
75
75
5
91
G1/2"
G1/2"
G1/2"
80
20
70
5
12
G1/2"
229
43
110
G1/2"
M12
ϕ40 k6
ϕ95.5 +0.04 0
22.5
30
210
44.5
157
240
397