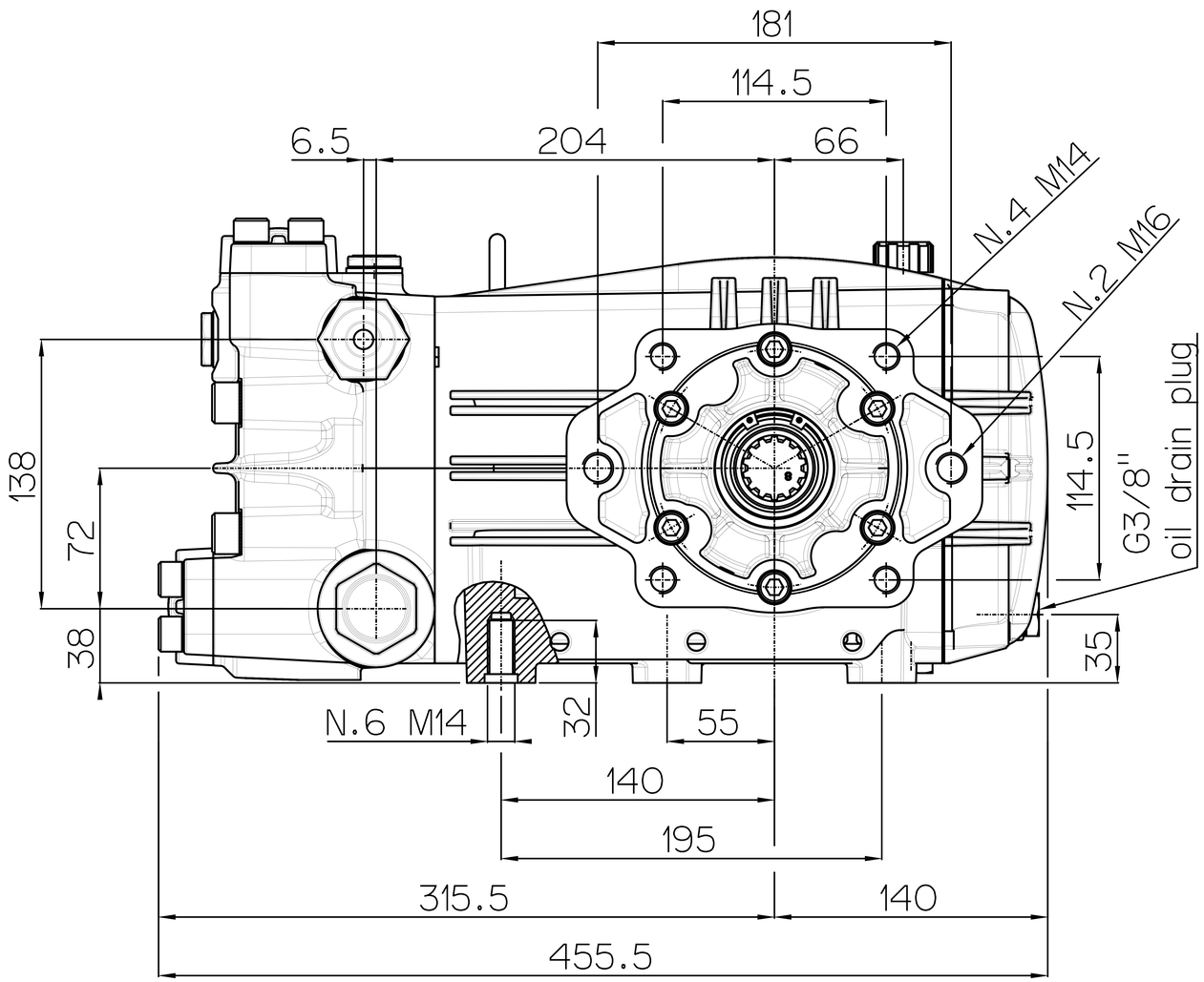
181
114.5
6.5
204
66
N.4 M14
N.2 M16
138
72
38
114.5
G3/8"
oil drain plug
35
N.6 M14
32
55
140
195
315.5
140
455.5

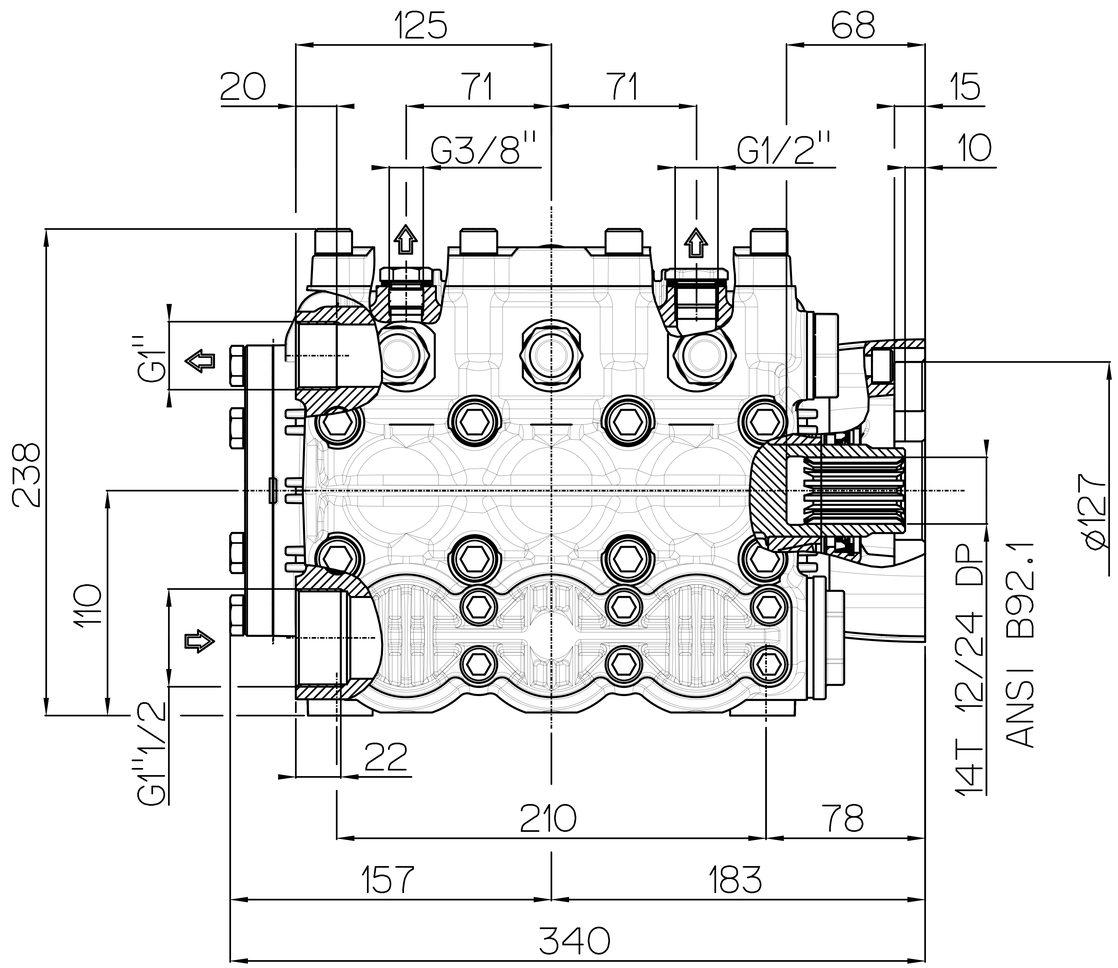
125
68
20
71
71
15
G3/8"
G1/2"
10
G1"
238
110
G1"1/2
22
210
78
157
183
340
14T 12/24 DP
ANSI B92.1
ø127