VRG 100

VRG 100 100 l/min - 24.4 GPM · 50 bar - 725 PSI

VRG 100

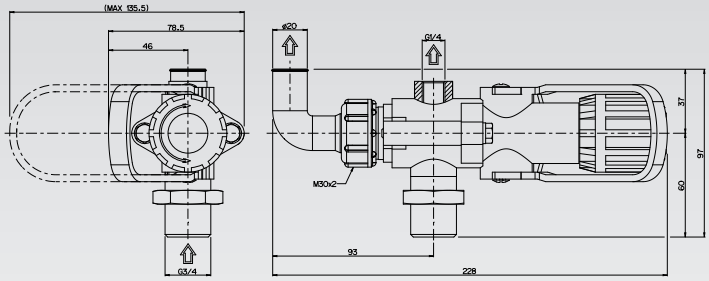

Modello *Model*	Codice *Part Number*	N° Mandate *Nr. of Outlets*	Raccordo *Hose barb*	Manometro *Manometer*	Modello pompa suggerito *Suggested pump model*	
			Mandata Out			
VRG 100	600531	1	20 mm	-	GAMMA 62 (50 bar)	870410

VRG 155 - 255

VRG 155 150 l/min - 40 GPM · 80 bar - 1200 PSI
VRG 255 250 l/min - 66 GPM · 80 bar - 1200 PSI

VRG 155

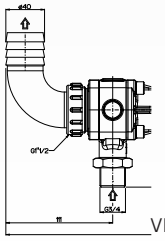

VRG 255

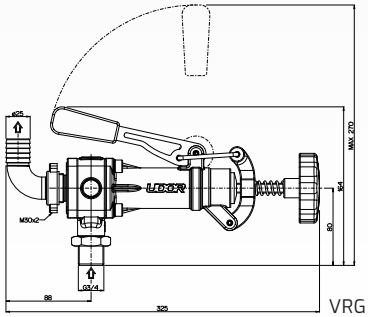

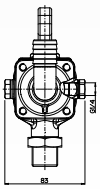

VRG 155

Modello *Model*	Codice *Part Number*	N° Mandate *Nr. of Outlets*	Raccordo *Hose barb*	Manometro *Manometer*	Modello pompa suggerito *Suggested pump model*	
			Mandata Out			
VRG 155	600505	1	25 mm	40 bar / 580 PSI	DELTA 125 / OMEGA 135	
				50 bar / 725 PSI	DELTA 140 / DELTA 170 / OMEGA 139 OMEGA 170 / BETA-S 135 / BETA 110 BETA 170	
				60 bar / 870 PSI	GAMMA 62 / GAMMA 85 - 105	770428
VRG 255	600508	1	36 mm	50 bar / 725 PSI	BETA 200 / BETA 240	
				60 bar / 870 PSI	GAMMA 155 / GAMMA 162 - 202 - 242	770428